MOTOR DRAWING

Premium Efficiency Motor: **FD-180TC**

WorldWide Electric Corporation
1 (800) 808-2131
Worldwideelectric.net

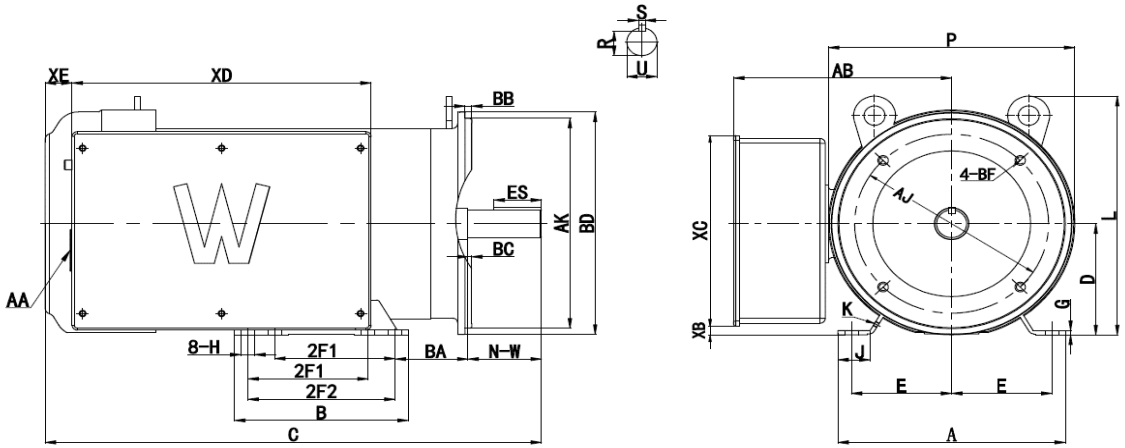

DIMENSION - INCHES

MOUNTING					A	B	C	D	G	L	P	AB
E	2F1	2F2	H	BA								
3.75	4.5	5.5	0.41	2.75	8.5	6.5	18.6	4.5	0.11	10	9.2	8

KETSET	KEY		SHAFT		TERMINAL BOX					K	J
R	ES	S	U	NW	XB	XC	XD	XE	AA		
0.986	1.78	0.25	1.125	2.75	0.66	7.7	11.4	2	3/4-14 NPT	M5	1.2

FLANGE					
AK	BD	AJ	BF	BB	BC
8.5	9	7.25	1/2-13	0.25	0.12

This document is the property of WorldWide Electric Corporation and may not be reproduced without express authorization