DATA SHEET

Premium Efficiency Motor: **LAM200-18-445/7TC** **60 Hz**

WorldWide Electric Corporation
1 (800) 808-2131
Worldwideelectric.net

Document Generated:	14-Sep-2023
Document ID:	

Customer:

MOTOR INFORMATION

HP	200
RPM	1800
Phase	3
Frequency	60 Hz
Voltage	230/460
Frame Size	445/7TC
Enclosure	TEFC
Degree of Protection	IP55
Service Factor	1.25
Poles	4
Full Load Speed	1790
Insulation Class	F
Temp Rise	80°C
NEMA Code Letter	G
Duty Cycle	S1 / Continuous
Slip	0.56%
NEMA Design	B
Moment of Inertia	76.948 lb.ft.^2
Locked Rotor Time (Hot)	12 seconds
Sound Pressure Level	103 dB(A)
Number of Starts	2 Cold/1 Hot
Max Ambient Temperature	40°C
Max Elevation	1000 m.a.s.l (3300 f.a.s.l)
Mounting	F1
Rotation	Bi-Directional
Area of Classification	Class 1 Division 2 Groups A,B,C,D T3B
Inverter Rating	10:1 CT / 20:1 VT
Standard	NEMA MG-1
Approvals	UL, CE, IEEE45, ABS

ADDITIONAL DATA

F2 Suitable	Yes
Shaft Material	AISI 1045
Connection Diagram	12 Lead Delta
Approximate Weight	2314.8 lbs.

EFFICIENCY/POWER FACTOR

LOAD	EFF	P. F.
100%	96.2 %	0.89
75%	96.1 %	0.87
50%	95.7 %	0.8

TORQUE

FULL LOAD	LRT	BDT
590 lb.ft.	202 %	343 %

AMPERAGE INFORMATION

	230V	460V
Full Load Amps	442.2A	221.1
Locked Rotor Amps	3150A	1575A
No Load Current	129A	64.5A
Usable at 208V	489 A	

BEARING INFORMATION

DE Bearing	6320 C3
ODE Bearing	6316 C3
Grease Type	Mobil Polyrex EM
DE Regreasing Interval	2400 Hours
ODE Regreasing Interval	3600 Hours
Grease Quantity	51g/33g

This document is the property of WorldWide Electric Corporation and may not be reproduced without express authorization

MOTOR DRAWING

Premium Efficiency Motor: **LAM200-18-445/7TC**

WorldWide Electric Corporation
1 (800) 808-2131
Worldwideelectric.net

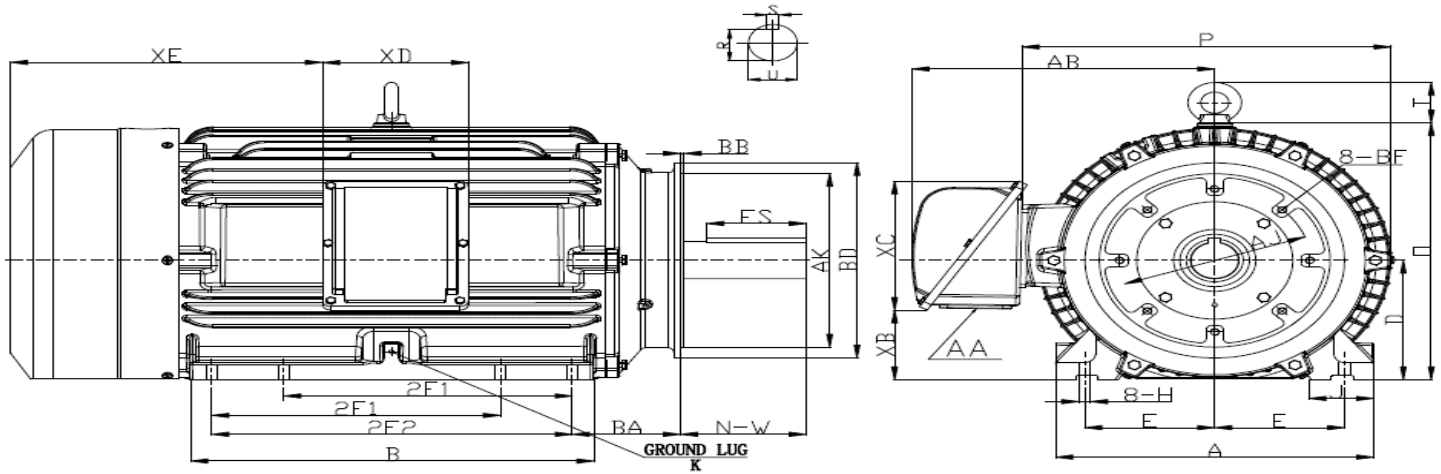

DIMENSION - INCHES

MOUNTING													
E	2F1	2F2	H	BA	A	B	C	D	G	P	O	T	AB
9	16.5	20	0.81	7.5	22	29	54.4	11	1.417	23.75	23.6	4.06	19.095

SHAFT & KEY				
S	ES	R	N-W	U
0.875	6.91	2.88	8.5	3.375

TERMINAL BOX				
AA	XB	XC	XD	XE
3 NPT	4.13	16.2	11.6	19.2

GROUND LUG
M10

FLANGE				
AK	BD	AJ	BF	BB
16	18	14	8*5/8-11	0.25

This document is the property of WorldWide Electric Corporation and may not be reproduced without express authorization

PERFORMANCE CURVES

Premium Efficiency Motor: **LAM200-18-445/7TC**

WorldWide Electric Corporation
1 (800) 808-2131
Worldwideelectric.net

Document Generated:	14-Sep-2023
Document ID:	

Customer:

Motor Type	LAM					
Output Rating (HP)	200		FL Speed	1790		
Full Load Torque	590	lb.ft	LRT (%FLT)	202	460 volt FLA	221.1
Rotor Wk^2	76.948	lb-ft^2	BDT (%FLT)	343	230 volt FLA	442.2A

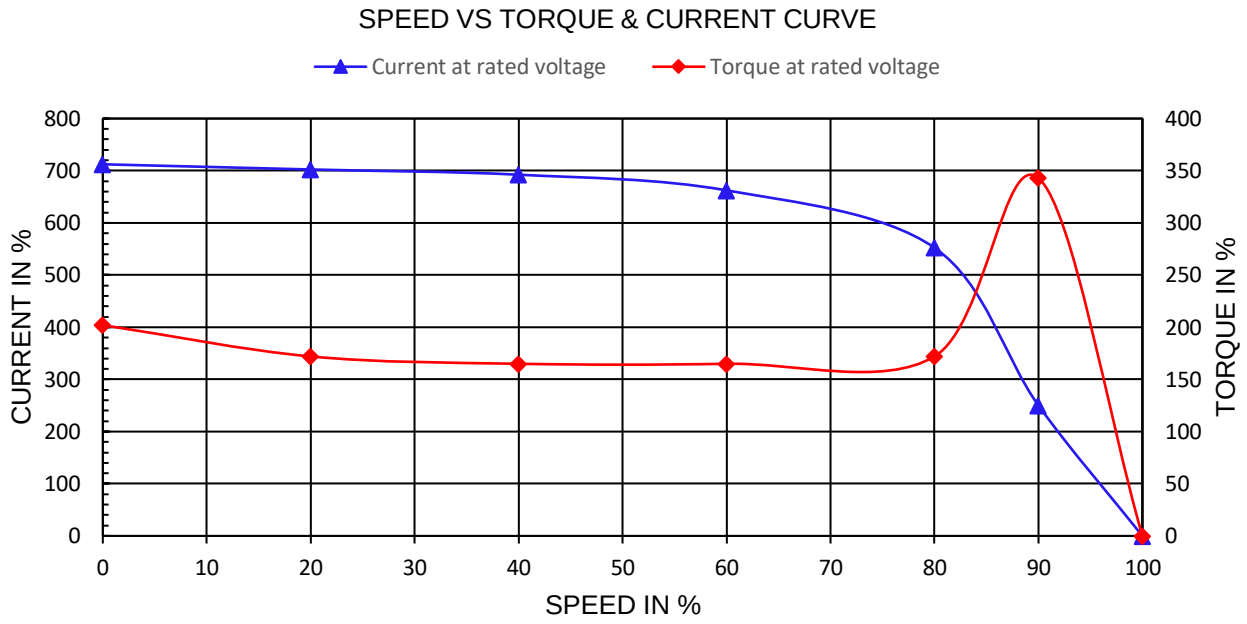

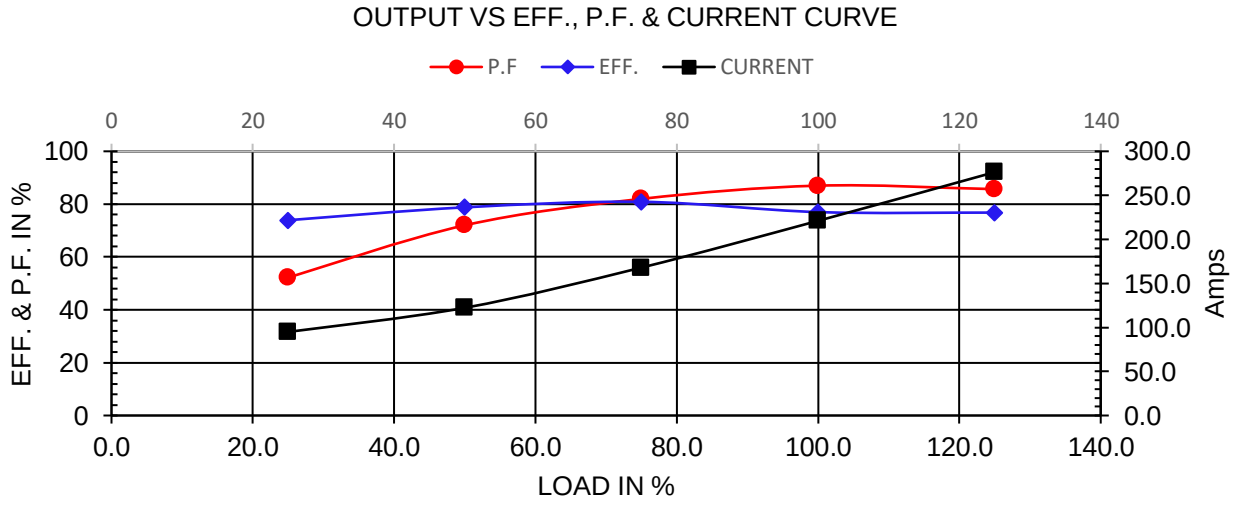

This document is the property of WorldWide Electric Corporation and may not be reproduced without express authorization.

NAMEPLATE / WIRING

Premium Efficiency Motor: **LAM200-18-445/7TC**

WorldWide Electric Corporation
1 (800) 808-2131
Worldwideelectric.net

Document Generated: 14-Sep-2023 Document ID:	Customer:

SAMPLE NAMEPLATE DATA

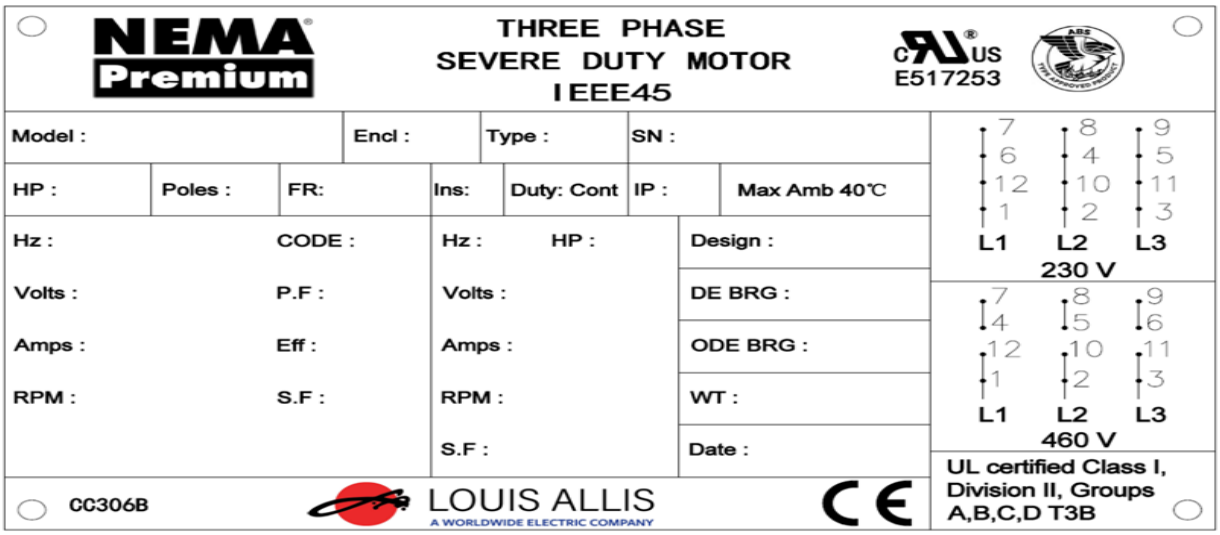

Model:	LAM200-18-445/7TC	**Encl:**	TEFC	**Type:**	AEH3				
HP:	200	**Poles**	4	**FR:**	445/7TC	**Ins:**	F	**IP:**	55
Hz:	60	**CODE:**	G	**Hz**	50	**HP:**	200	**Design:**	B
Volts:	230/460	**P.F:**	0.89	**Volts:**	190/380			**DE BRG:**	6320 C3
Amps:	442.2/221.1	**Eff:**	0.962	**Amps**	408.0/204.0			**ODE BRG:**	6316 C3
RPM:	1790	**S.F:**	1.25	**RPM**	1485			**WT:**	2314.8 lbs.
				S.F:	1.00				

This document is the property of WorldWide Electric Corporation and may not be reproduced without express authorization