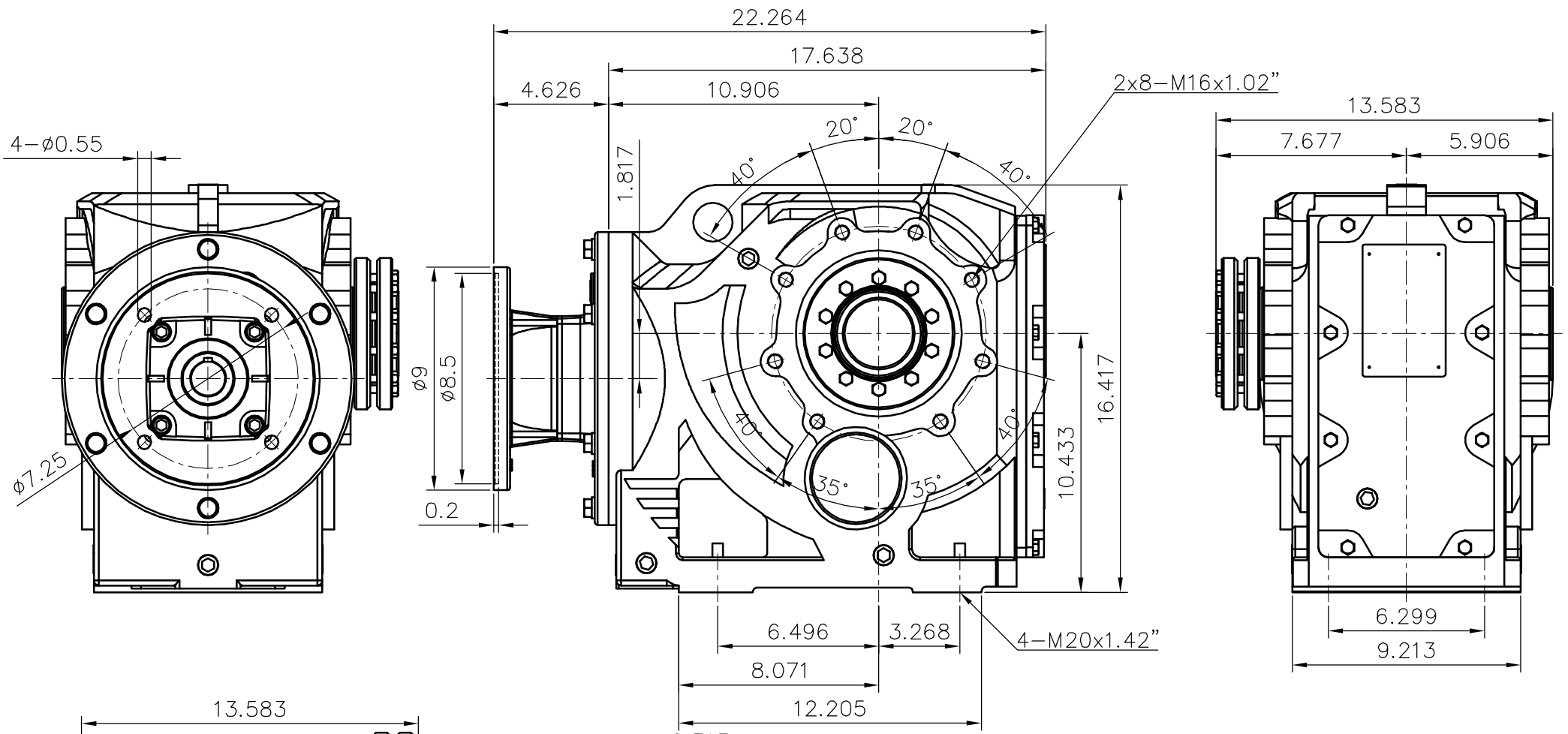

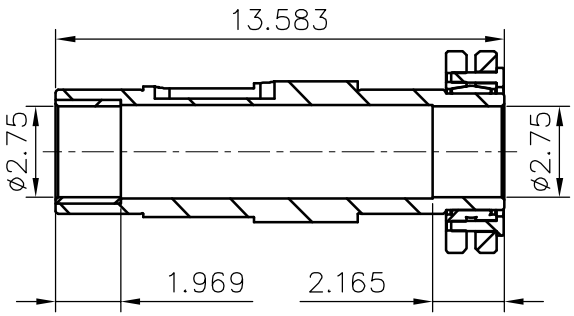

OUTPUT BORE

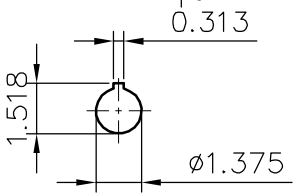

INPUT BORE

NO.	PART NO.	MATERIAL	PC	RAW MATERIAL	WEIGHT	NOTE

SCABBLE TOLERANCE
>0 ± 0.1
>6 ± 0.2
>30 ± 0.3
>120 ± 0.5
>315 ± 0.8

MACHINING REQUIRED
~ NO-MACHINING
▽ 50S
▽▽ 25S
▽▽▽ 6S
ANG.

DWG.	2020.11.20	PEANUT
DESN.	2020.11.20	PEANUT
APPR.		
	DATE	NAME
SCALE	1:7	

WORLD WIDE

TITLE: KAN97-213/5TC+Power Loc

DWG. NO.: KAN97-B-POWER LOCK

REV.: A

NO.	SECTION	ORIGIN	MODIFICATION	DATE	IN CHARGE